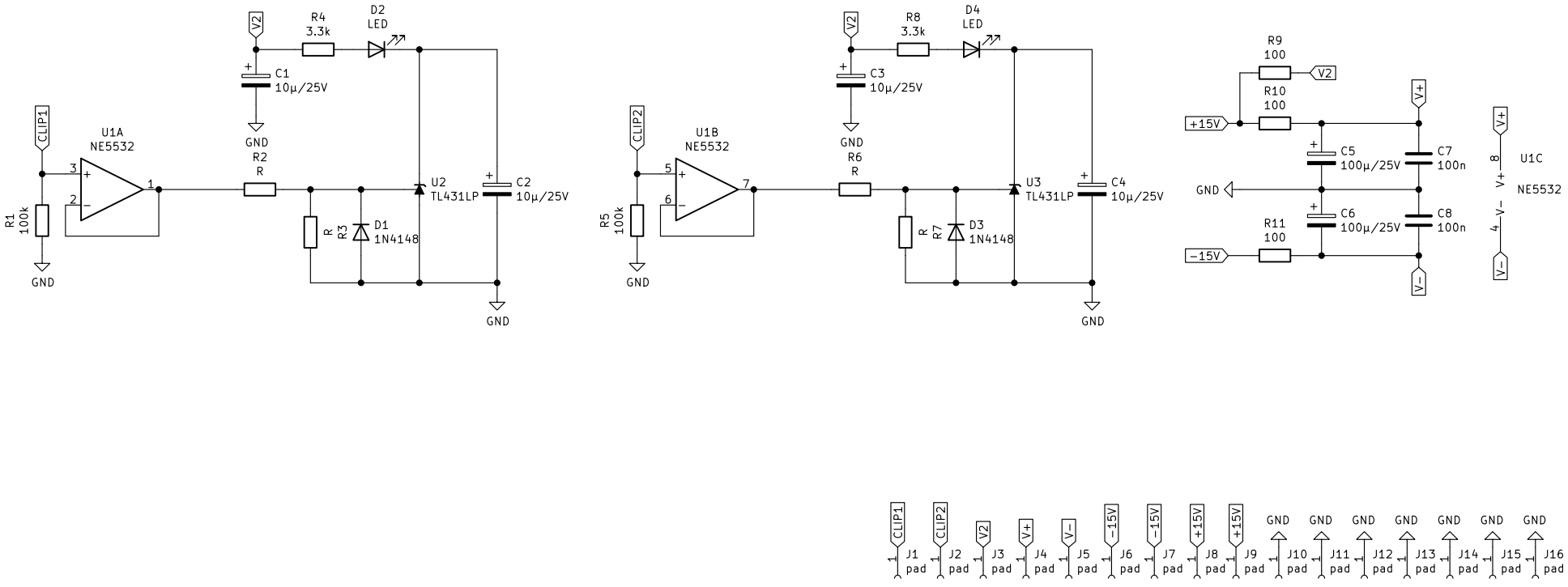


Sheet: /
File: clipindicator.kicad_sch

**Title:**

| Size: A4 | Date: | **Rev:** |
|---|---|---|
| KiCad E.D.A. eeschema 6.0.6+dfsg−1 | | Id: 1/1 |